Woods
AIR MOVEMENT

BoudECa Smart Industrial Axial Fan

A multi-application range of EC fans

BoudECa

Introducing our new BoudECa Industrial Axial Fan range

– with more efficiency, more flexibility and more communication.

Unleashing power, precision and performance – meet the BoudECa Industrial Axial Fan range

Engineered for versatility and built for performance, the new BoudECa Industrial Axial Fan range from Woods Air Movement redefines efficiency, noise reduction, and control across demanding industrial environments. With sizes from 710 to 900mm and advanced EC motor technology, this range delivers exceptional airflows of up to 30,060 m³/h and pressures exceeding 230 Pa, all while achieving IE5 class efficiency.

Whether you're cooling critical equipment in adiabatic systems, maintaining precise temperatures in cold rooms, or improving energy efficiency in heat exchangers, the BoudECa Industrial Axial Fan adapts to your needs with class-leading durability, smart controllability, and aerodynamic design. All backed by over a century of trusted innovation.

We don't just test in controlled lab setups – we test out-of-the-box products in real-world, representative installed conditions. That means every performance figure we publish reflects what you can expect in practice, not unrealistic isolated lab results.

Features and benefits of our BoudECa Industrial Axial Fan range

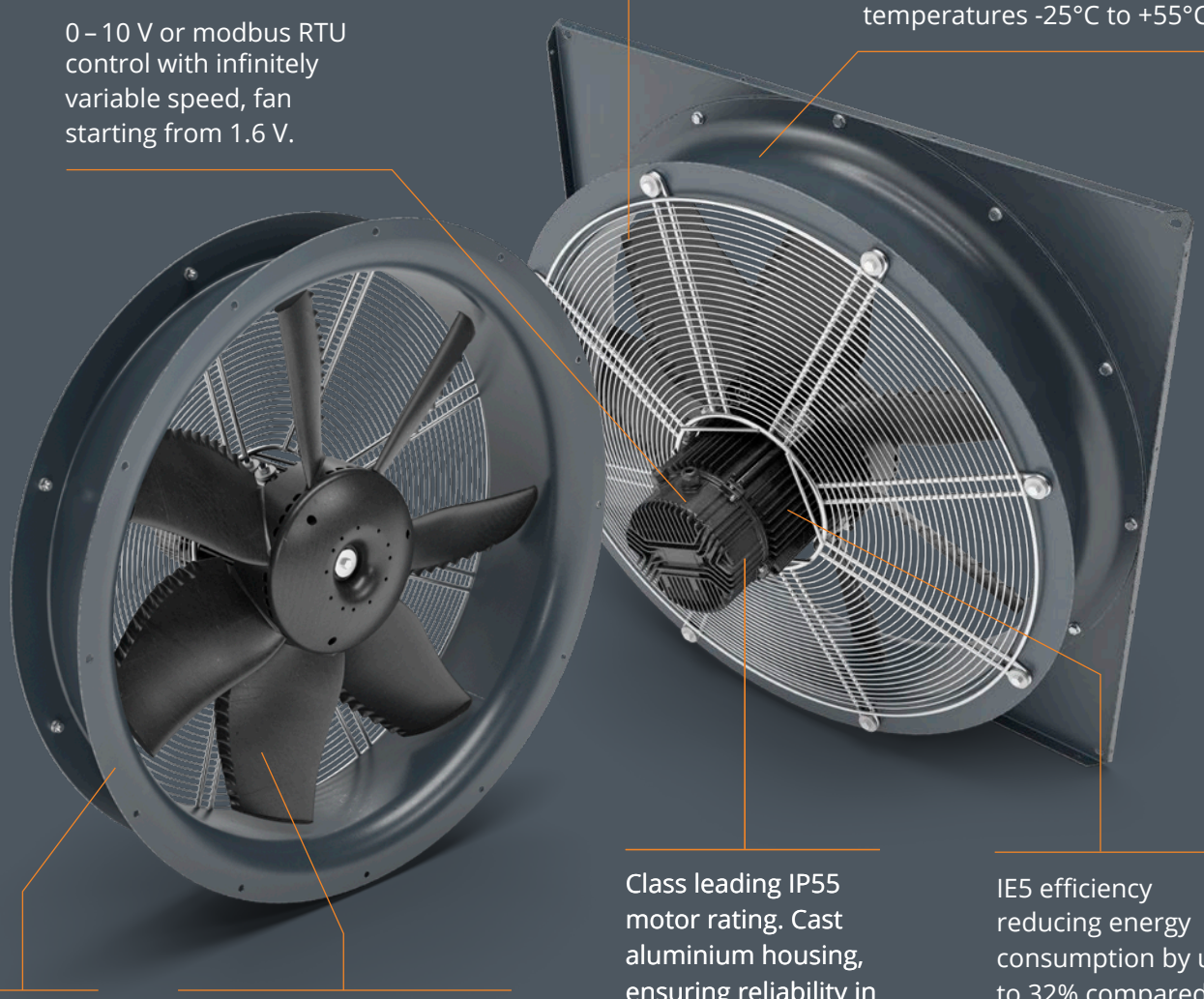

Integrated Modbus RTU (RS485)

Operating ambient temperatures -25°C to +55°C.

0 – 10 V or modbus RTU control with infinitely variable speed, fan starting from 1.6 V.

Fully EMC compliant & CE marked.

Aerodynamically optimised CFD designed impeller, with crenellated blade and tip for reduced noise.

Class leading IP55 motor rating. Cast aluminium housing, ensuring reliability in the most demanding applications.

IE5 efficiency reducing energy consumption by up to 32% compared to AC technology.

Standard and bespoke plate sizes and finishes available. Safety grille fitted as standard

Engineered for versatility, powered by EC efficiency

Designed to meet the demands of a wide range of industrial applications, the BoudECa Industrial Axial Fan range combines installation flexibility with advanced energy-saving technology. At the heart of each unit is high-efficiency EC motor technology, delivering precise speed control, lower energy consumption, and reduced operating costs. Whether you're upgrading existing infrastructure or designing for new builds, the BoudECa Industrial Axial Fan is a smart, future-proof choice for reliable, efficient air movement across sectors.

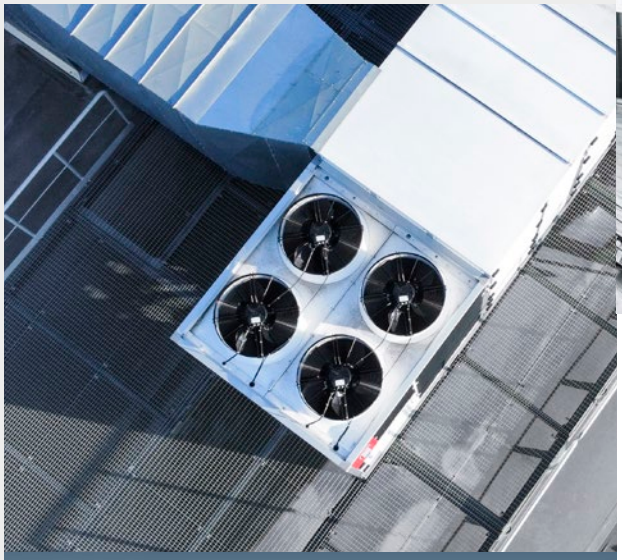

From **cooling towers** and **adiabatic systems** to **heat exchangers**, **cold rooms**, and **agricultural** environments, the BoudECa Industrial Axial Fan range adapts effortlessly to diverse system requirements.

EC Industrial specifications

PRODUCT FACTS

- Operating ambient temperatures -25°C to +55°C
- Independently tested class-leading IP55 rating
- IE5 Efficiency
- 0 – 10 V or Modbus RTU control with infinitely variable speed.
- Fan starting from 1.6 V
- Fully EMC compliant and CE marked
- Built in self-protection
- Aerodynamically optimised Impeller by CFD design
- Standard and bespoke plate sizes and finishes
- Remote monitoring
- Fault Reporting
- PLC & BMS compatible
- Up to 32 fans on one RS485 network

IMPELLER

- 710 to 800 mm one piece moulded 30% glass filled UV stabilised polymer with crenellated blades and sound reducing wing tip feature.
- 900 mm adjustable pitch 30% glass filled UV stabilised polymer blade secured in an alloy hub.

MOTORS

All motors are constructed from aluminium alloy as standard and are totally enclosed, air stream rated with class F insulation. Black painted finish.

CASINGS

Casings are spun from corrosion resistant pre-galvanised sheet steel with integral pre-drilled and radiused inlet flanges. Customisation options available, finished in powder coat RAL 7016 as standard, or other colours available on request.

QUALITY

Woods products and components are designed, manufactured and tested to international quality standards, including ISO 9001 and ISO 14001.

GUARDS

Woods put safety at the forefront of product supply. Fans are fitted with robust corrosion resistant guards that meet the requirements of BS 848-5 and ISO 12499.

MADE IN UNITED KINGDOM

Performance data & fan chart

EC INDUSTRIAL 710

Size	Control voltage (V)	RPM	Volume flow (m^3/s)	Static pressure (Pa)	Electrical power (kW)	Lw (dB)	LwA (dBA)
710	10	1257	4,60	195,29	2,67	92	89
	9	1194	4,37	175	2,29	91	88
	8	1062	3,90	139	1,62	89	85
	7	933	3,45	107	1,13	85	81
	6	796	2,93	77	0,72	79	75
	5	672	2,49	55	0,46	75	71
	4	535	2,00	34	0,26	70	65
	3	406	1,52	20	0,14	64	59
	2	278	1,06	9	0,08	60	55

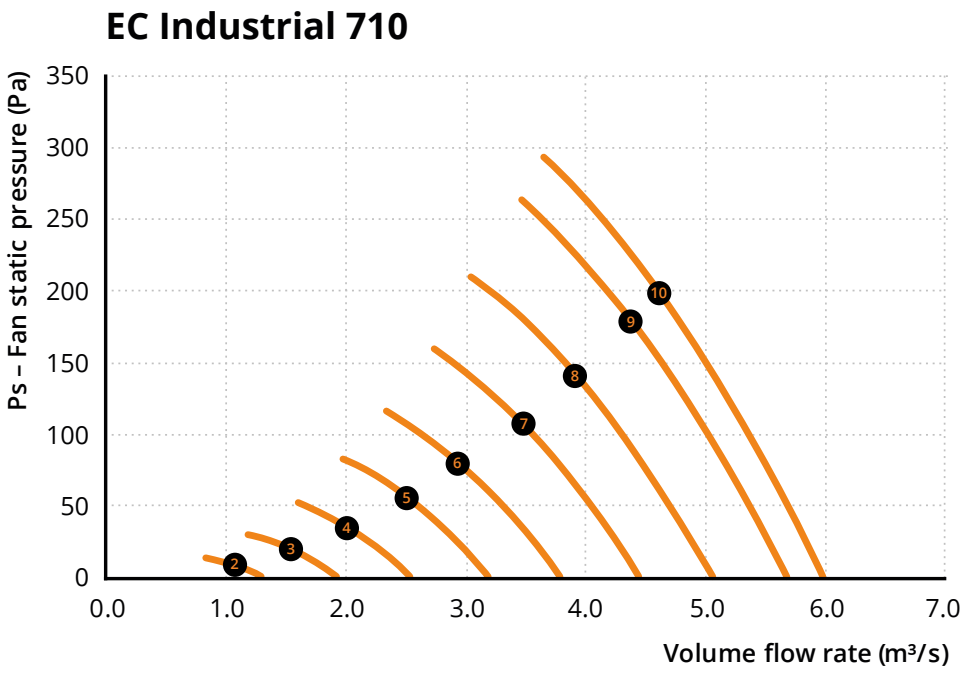

Aerodynamic performance is measured in accordance with ISO 5801 (Type A installation) in our AMCA-accredited laboratory. Performance data shown is for Form B.

Acoustic performance is tested in compliance with ISO 13347-3 and AMCA 300 (Type A installation) in our AMCA 300-accredited laboratory.

All published data reflects actual installed conditions, including guard losses, and – where applicable – applies to the fan's outlet side.

Performance data & fan chart

EC INDUSTRIAL 770

Size	Control voltage (V)	RPM	Volume flow (m³/s)	Static pressure (Pa)	Electrical power (kW)	Lw (dB)	LwA (dBA)
770	10	1198	5,3	191,0	2,86	94	90
	9	1136	5,0	173,4	2,45	93	89
	8	1017	4,5	137,8	1,77	90	87
	7	887	3,9	104,5	1,20	85	82
	6	770	3,4	75,0	0,80	81	77
	5	650	2,9	53,7	0,51	77	72
	4	521	2,4	33,5	0,29	72	67
	3	395	1,8	18,8	0,16	66	60
	2	273	1,3	8,7	0,09	61	56

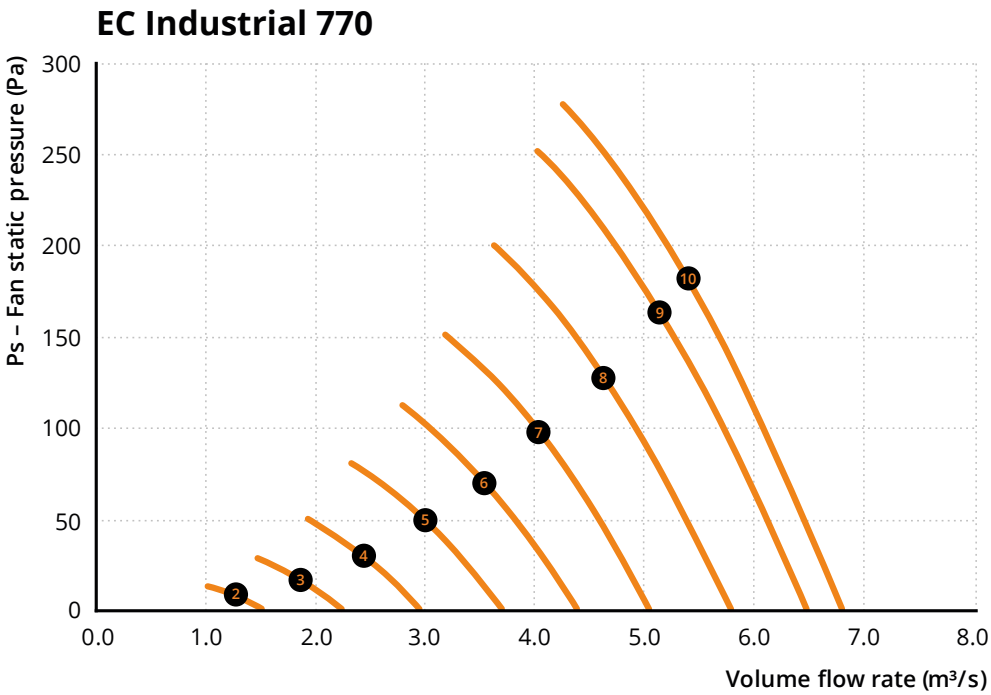

Aerodynamic performance is measured in accordance with ISO 5801 (Type A installation) in our AMCA-accredited laboratory. Performance data shown is for Form B.

Acoustic performance is tested in compliance with ISO 13347-3 and AMCA 300 (Type A installation) in our AMCA 300-accredited laboratory.

All published data reflects actual installed conditions, including guard losses, and – where applicable – applies to the fan's outlet side.

Performance data & fan chart

EC INDUSTRIAL 800

Size	Control voltage (V)	RPM	Volume flow (m³/s)	Static pressure (Pa)	Electrical power (kW)	Lw (dB)	LwA (dBA)
800	10	1097	5,4	173,3	2,58	93	90
	9	1044	5,2	159,3	2,23	92	89
	8	936	4,6	129,2	1,63	88	84
	7	819	4,1	98,7	1,11	84	80
	6	706	3,5	70,5	0,73	81	76
	5	594	3,0	49,8	0,46	77	72
	4	486	2,4	32,8	0,28	72	67
	3	377	1,9	19,3	0,16	68	63
	2	261	1,3	9,05	0,09	65	59

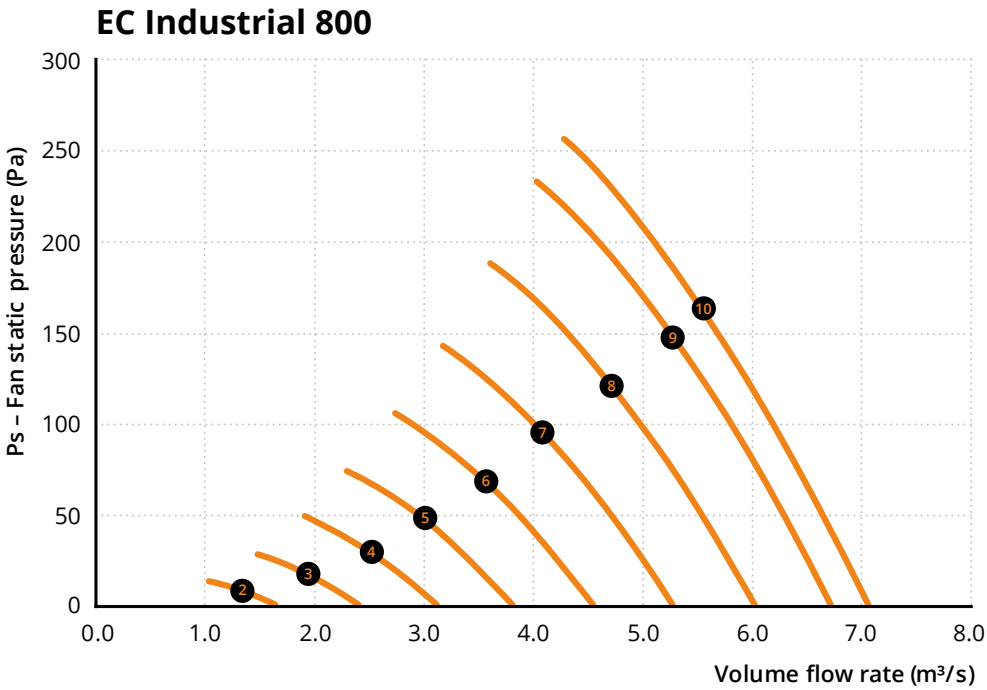

Aerodynamic performance is measured in accordance with ISO 5801 (Type A installation) in our AMCA-accredited laboratory. Performance data shown is for Form B.

Acoustic performance is tested in compliance with ISO 13347-3 and AMCA 300 (Type A installation) in our AMCA 300-accredited laboratory.

All published data reflects actual installed conditions, including guard losses, and – where applicable – applies to the fan's outlet side.

Performance data & fan chart

EC INDUSTRIAL 900

Size	Control voltage (V)	RPM	Volume flow (m^3/s)	Static pressure (Pa)	Electrical power (kW)	Lw (dB)	LwA (dBA)
900	10	993	7,18	156,04	2,98	90	85
	9	949	6,79	144	2,60	89	84
	8	849	6,00	116	1,89	86	81
	7	751	5,30	91	1,31	83	78
	6	653	4,60	69	0,88	80	74
	5	554	3,89	49	0,56	76	70
	4	449	3,15	32	0,32	71	66
	3	355	2,47	20	0,18	66	61
	2	258	1,80	10	0,10	61	56

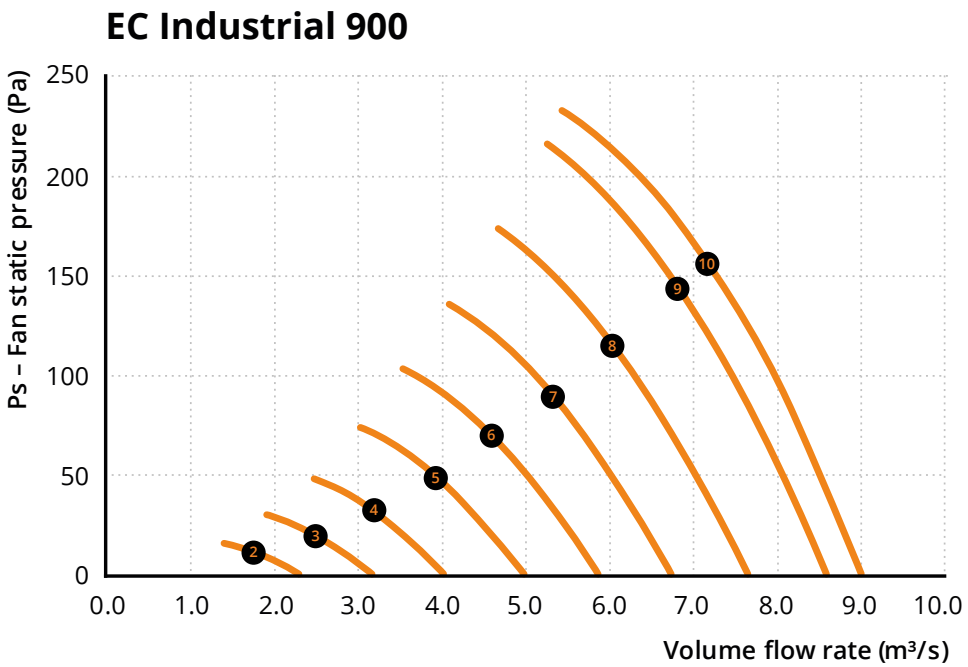

Aerodynamic performance is measured in accordance with ISO 5801 (Type A installation) in our AMCA-accredited laboratory. Performance data shown is for Form B.

Acoustic performance is tested in compliance with ISO 13347-3 and AMCA 300 (Type A installation) in our AMCA 300-accredited laboratory.

All published data reflects actual installed conditions, including guard losses, and – where applicable – applies to the fan's outlet side.

Dimensions & weights

WITH PLATE

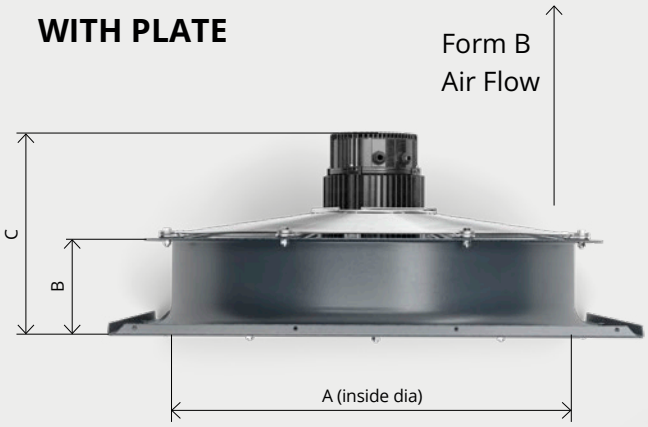

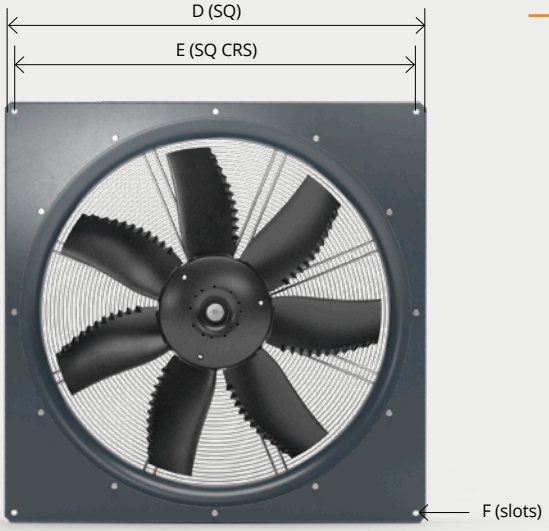

Size	A (mm)	B (mm)	C (mm)	D (mm)	E (mm)	F	Weight (kg)
710	710	183	382	850	810	4 slots of 11 Øx3	32.7
770	770	183	392	970	910	4 slots of 11 Øx3	41.1
800	800	178	403	970	910	4 slots of 11 Øx3	40.6
900	900	162	386	1070	1010	4 slots of 11 Øx3	41.7

WITHOUT PLATE

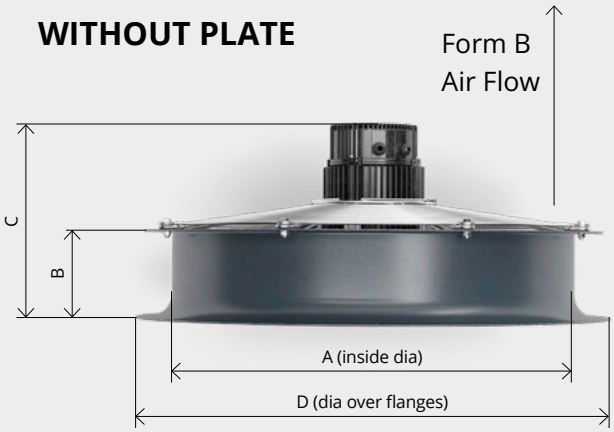

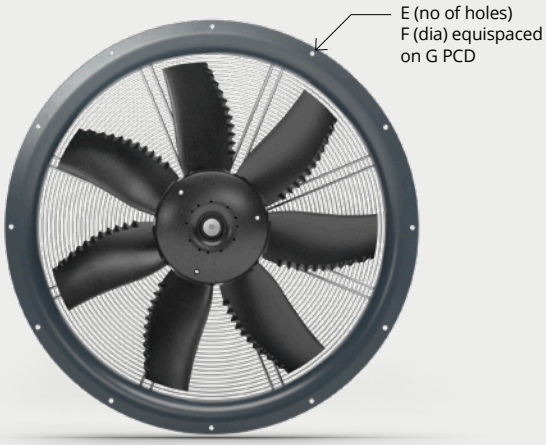

Size	A (mm)	B (mm)	C (mm)	D (mm)	E	F (mm)	G (mm)	Weight (kg)
710	710	180	380	804	8	10	790	26.4
770	770	180	390	920	12	10	890	32.7
800	800	175	388	950	12	10	920	33.1
900	900	160	383	1050	12	10	1025	33.1

Compact Power – unlocking the advantages of internal rotor EC motors

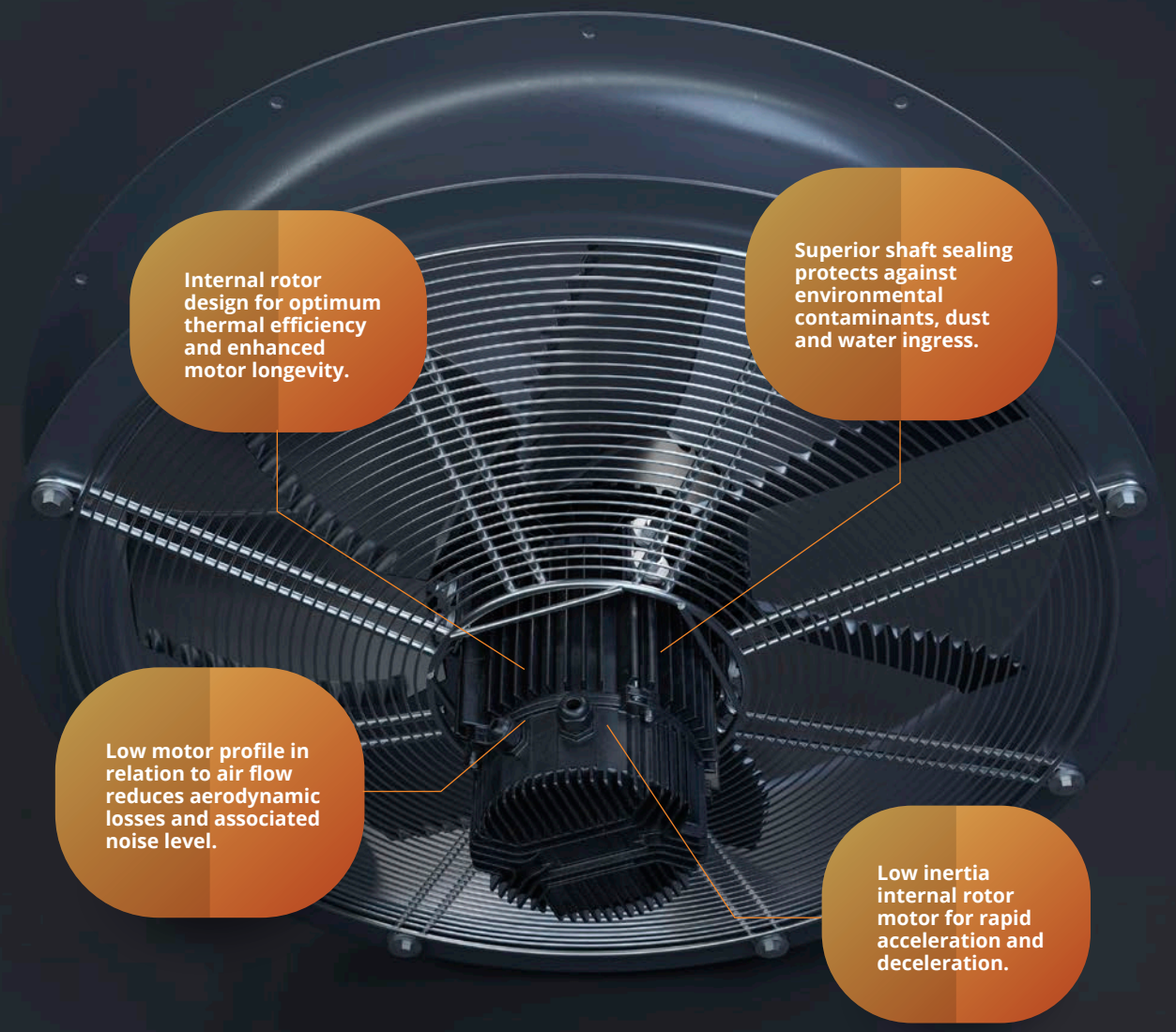

Woods Air Movement has a range of standard product and designs, and also designs and develops a wide range of bespoke solutions

We manufacture a range of air movement and ventilation products that are the most reliable and of the best quality for various applications and industries. To ensure you receive the best quality, we run various tests on our fans before they are delivered to your doorstep.

Most of our product range is available as standard or high temperature, please contact one of our sales team members to find out more technical information on our products.
If any of products do not meet your requirements then we have in-house capabilities to assist with designing, engineering and manufacturing the perfect solution for you.

ENSURING THE BEST POSSIBLE QUALITY IN EVERY DETAIL FOR OUR AXIAL FAN RANGE

- All aluminium impeller parts are X-ray inspected in accordance with ASTM E155.
- We ensure our products follow the ISO1940 Balance standards and Vibration BS848 pt 7 ISO14694.
- Our fans endure impeller strain gauge tests of speed over 125% for 15min.

PRODUCT SELECTION AND CONFIGURATION HAS NEVER BEEN EASIER – OR MORE POWERFUL

We always try to make the selection of our products as easy, accurate and fast as possible. With the brand new release of our Fan Selector we have taken a huge step forward and we hope that you will enjoy the many new features and functions – including web-based multi-platform accessibility with touch interface and interactive performance charts.

FAN SELECTOR
WOODS AIR MOVEMENT

> **WOODSAIRMOVEMENT.COM**

Expertise straight from the source – we will guide you to the best service solutions for added peace of mind

When it comes to fans and air movement, you couldn't be in safer hands. With over 100 years of product and application experience we have some of the world's most experienced and knowledgeable experts on hand to help you.

WOODS CARES

Woods Air Movement takes great pride in how we support users of our fans. Our Service experts continuously aim to ensure optimal performance and reduced life cycle costs through world-class maintenance and specialist services. The Service leadership we offer is built on responsiveness, knowledge and trustworthiness.

WE ACHIEVE THIS THROUGH:

- Being there when you need us
- Applying unparalleled reliability expertise giving the most cost-effective services
- Working in partnership with clients to maximise ventilation asset availability
- Helping you to ensure that operational expenditure remains predictable and fixed
- Striving to extend the life of your ventilation assets
- Engaging the industry's best engineering team for optimal retrofits performance and ROI.

Because we hear you and want to partner with you, Woods will tailor service agreements that bring together all our technical expertise and aftermarket services to give you exactly what you need.

BY WORKING CLOSELY TOGETHER WE CAN:

- Fully understand your needs and priorities
- Reduce the time it takes to devise and implement the best possible solutions.

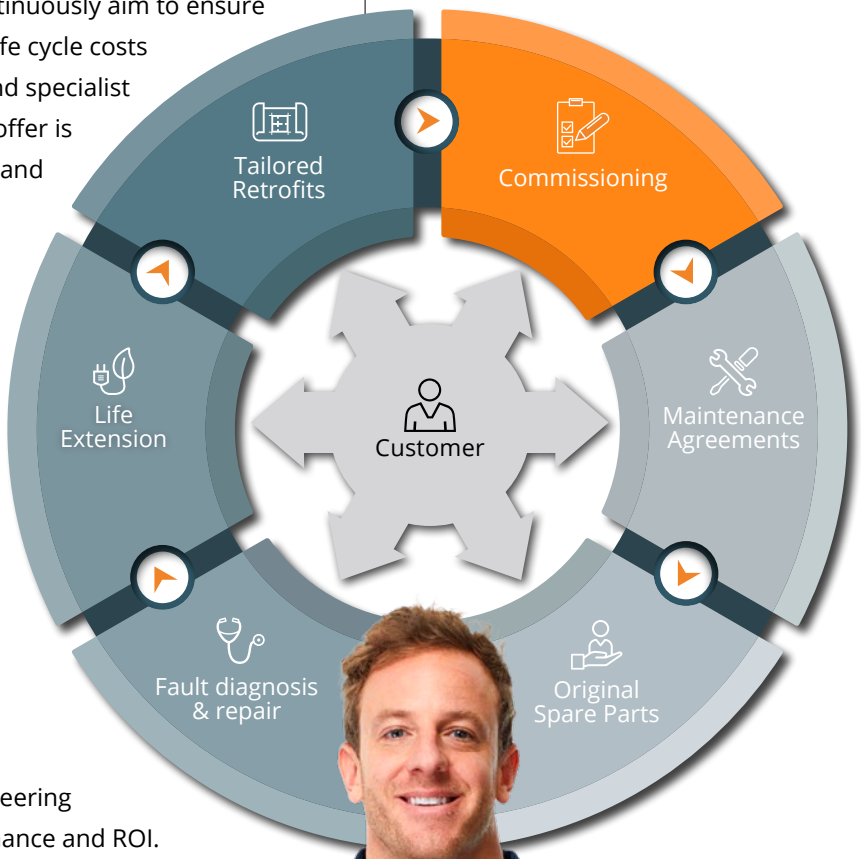

Building on more than 100 years of innovation

Woods was founded in 1909 in Colchester, United Kingdom. We began as manufacturers of small electric motors and introduced a range of propeller fans in the 1920s.

100 YEARS OF EXPERIENCE

Over the years, Woods moved away from manufacturing motors and concentrated on the design and manufacture of axial fans, developing the first aerofoil blade design. This continuous development has evolved into one of the world's largest ranges of certified axial fans for almost any application imaginable including fire safety, ventilation, industrial process, oil and gas and marine.

Woods was merged with Fläkt in 2002 to create Fläkt Woods which was subsequently merged with Denco Happel in 2016 to create FläktGroup. In 2020, Fläkt Woods changed their trading name to Woods Air Movement under FläktGroup holdings and opened offices in the United States of America, Germany and Singapore.

Woods has over 100 years of experience and knowledge in designing axial flow fans and remains a distinct brand within the FläktGroup family.

OUR FOOTPRINT

Our head office is situated in Colchester in the United Kingdom with the state of the art factory. We also have a factory and office in the United States of America and Singapore as well as an office situated in Germany. In India we have installed one of the first test rigs in the country. Our products are distributed and reach various markets globally, through strong partnerships with over 70 international distributors and agents.

Woods Air Movement delivers smart and energy efficient Air Movement and Fire Safety solutions to support every application area. We offer our customers innovative technologies, high quality and outstanding performance. The widest range of Air Movement and Ventilation products in the market, and strong market presence with over 100 years of experience and manufacturing of products, guarantees that we are always by your side, ready to deliver Excellence in Solutions.

Contact our friendly sales team today for more information

Call: +44 (0) 1206 222 555
Email: quotations.woods@flaktgroup.com
www.woodsairmovement.com

WAM_DC_00084GB_BoudECa Industrial Axial Fan_BR_20251213_R1 © Copyright 2025 Woods Air Movement